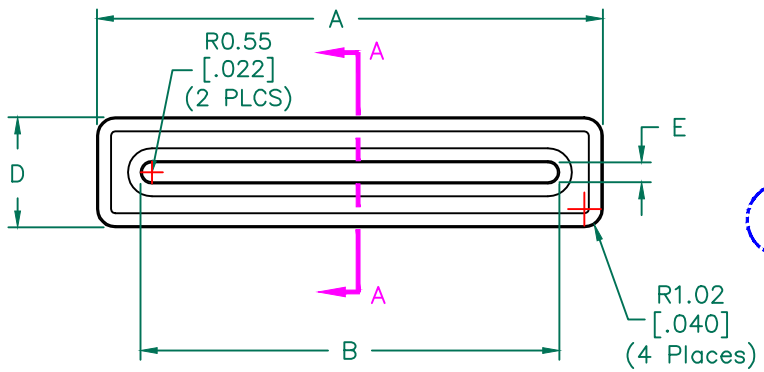

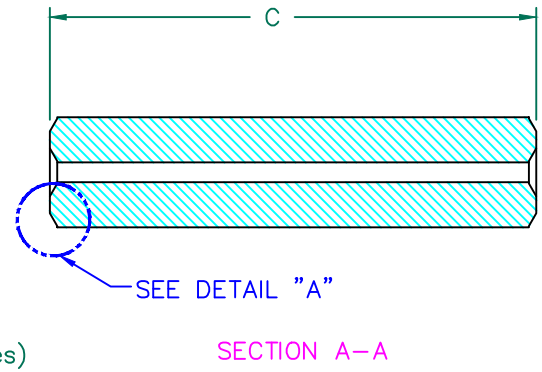

IMPEDANCE (Z)			
Frequency	25 MHz	100 MHz	300 MHz
Nominal (REF)	95 Ω	230 Ω	480 Ω
Minimum	- Ω	184 Ω	- Ω

Z vs. FREQUENCY

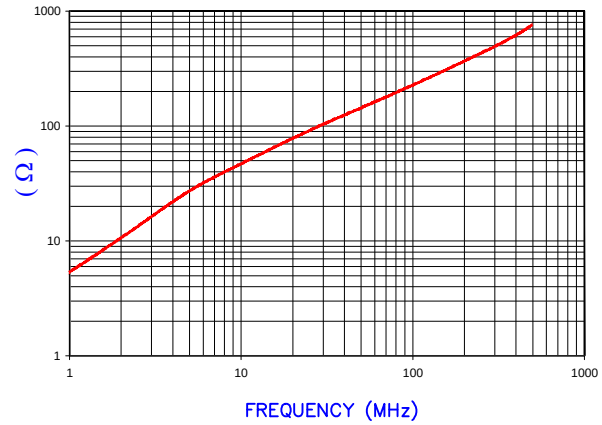

AGILENT E4991A Impedance/Material Analyzer
HP 16092A-Test Fixture, REF # 3107

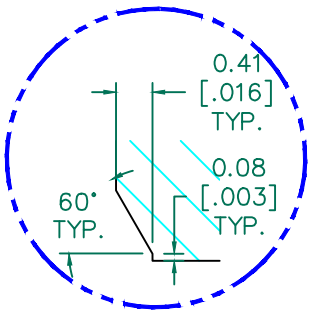

DETAIL "A"
CHAMFER
SCALE=12:1

FERRITE CORE DIMENSIONS (SPEC): mm [in]

A	28.00 [1.102]	± 0.51 [.020]
B	23.00 [.906]	± 0.35 [.014]
C	27.00 [1.063]	± 0.45 [.018]
D	6.10 [.240]	+ 0.36 [.014] / − 0.20 [.008]
E	1.10 [.043]	+ 0.25 [.010] / − 0.10 [.004]

WEIGHT/1000 19.12 kgs [42.15 Lbs]

NOTES: UNLESS OTHERWISE SPECIFIED

1. COSMETIC SPECIFICATION REFER TO WI–QA–038.

SCALE DRAWING 1:1

28R1103–000

DIMENSIONS ARE IN mm[INCHES].

REV	DESCRIPTION	DATE	INT
C	UPDATE COMPANY LOGO	05/29/15	QIU
B	UPDATE Z SPEC AND COMPANY LOGO	07/27/07	JRK
A	ORIGINAL DRAFT	03/01/04	JRK

This print is the property of Laird Tech. and is loaned in confidence subject to return upon request and with the understanding that no copies shall be made without the written consent of Laird Tech. All rights to design or invention are reserved.

Laird

PROJECT/PART NUMBER: 28R1103–000		REV C	DRAWN BY: JRK
DATE: 03/01/04	SCALE: 2.5 : 1		MATERIAL: FERRITE
CAD # 28R1103–000–C	TOOL # R1103		