RoHS compliant

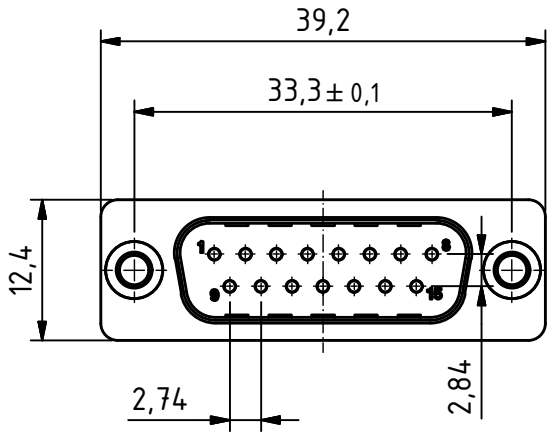

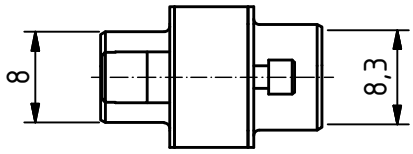

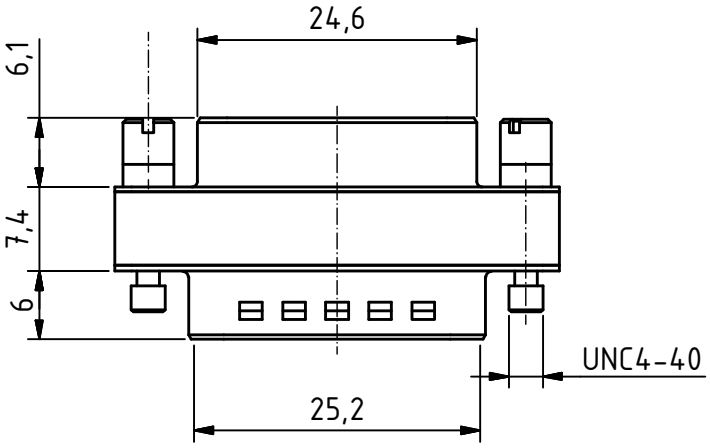

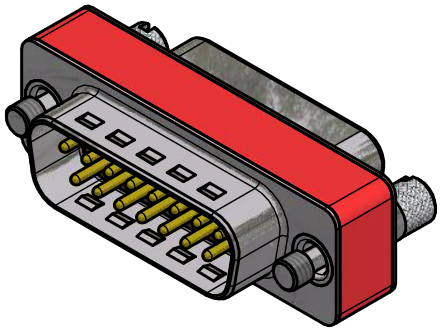

Capacitor value 1'000 pF

MATERIALS
- Insulator: Thermoplastic UL 94-V-0 black
- Frame: Thermoplastic UL 94-V-0 red
- Contact: Machined / Copper alloy
- Contact finish: Quality class 2
- Shell: steel tin plated

CHARAKTERISTICS
- Working voltage: 100V
- Current rating: 7.5A
- Contact resistance: max. 10mΩ - DIN41652
- Insulation resistance: >1GΩ
- Temperature range: -55° to +125°C

General tolerances (Deltron standard)				
size in mm	> 0.5 up to 3	> 3 up to 6	> 6 up to 30	> 30 up to 120
tolerances	±0.1	±0.2	±0.2	±0.3

All dimensions in mm	Rev.	Rev.	Rev.	DE005678 part no.
	Rev.	Rev.	Rev.	

DFA15S/15P/2FP102UN	1.5:1 scale	drawn	09.08.2018	mw
		checked		
		approved		

DELTRON SWISS CONNECT 2 CUSTOMIZE
Industrie Neuhof 8c
CH-3422 Kirchberg
www.d-sub.swiss

K063151
drawing no.

Plotdate: 27.08.2019 13:18:09

Copyright by Deltron AG This drawing may not be copied, reproduced or distributed in any way without written permission. Drawing subject to change.