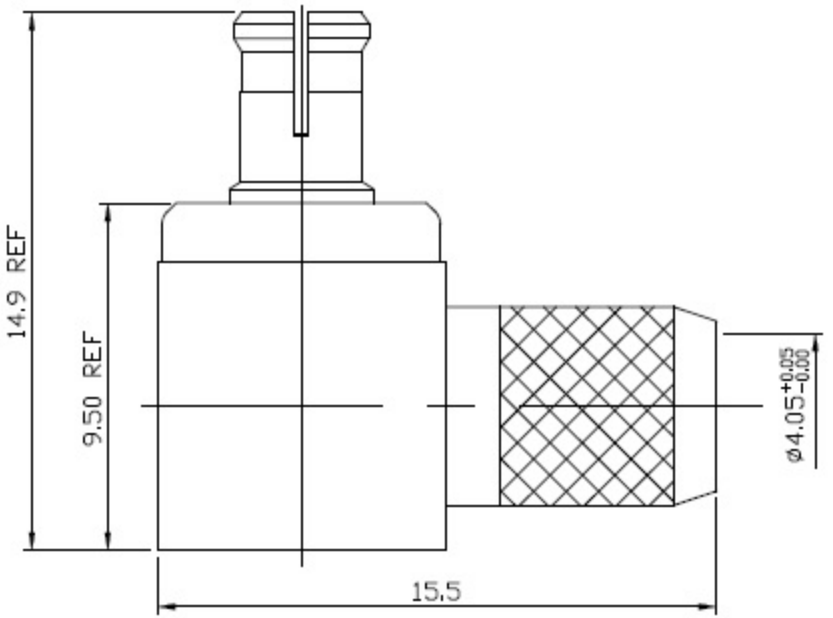

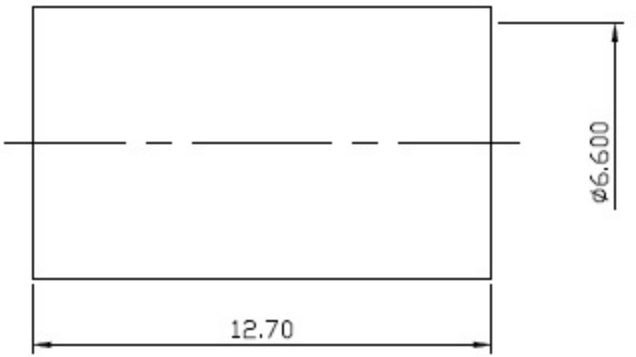

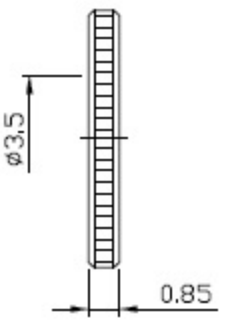

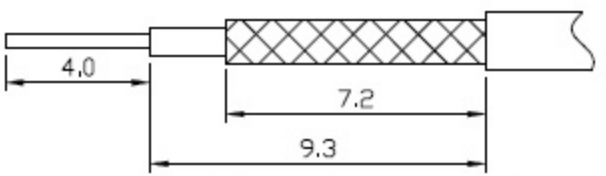

MATERIAL : BODY-BECU
SLEEVE-BRASS
CONTACT PIN-BRASS
INSULATOR-TEFLON
CAP-BRASS
RING-BRASS

FINISH : BODY-GOLD PLATING OVER NICKEL
SLEEVE-GOLD PLATING OVER NICKEL
CONTACT PIN-GOLD PLATING OVER NICKEL
CAP-GOLD PLATING OVER NICKEL
RING-GOLD PLATING OVER NICKEL

DIMENSIONS ARE IN MILLIMETERS TOLERANCE			SCHMID-M
·× ±0.5 ·×× ±0.1 ·××× ±0.05	ANGLE ±3°	SCALE 5:1 REV A-1	TITLE MCX R/A PLUG FOR LMR240
DRAWN	DATE 101.06.21		DRAWING NO MCX-1113-TGG
APPROVAL	DATE		FILE NO