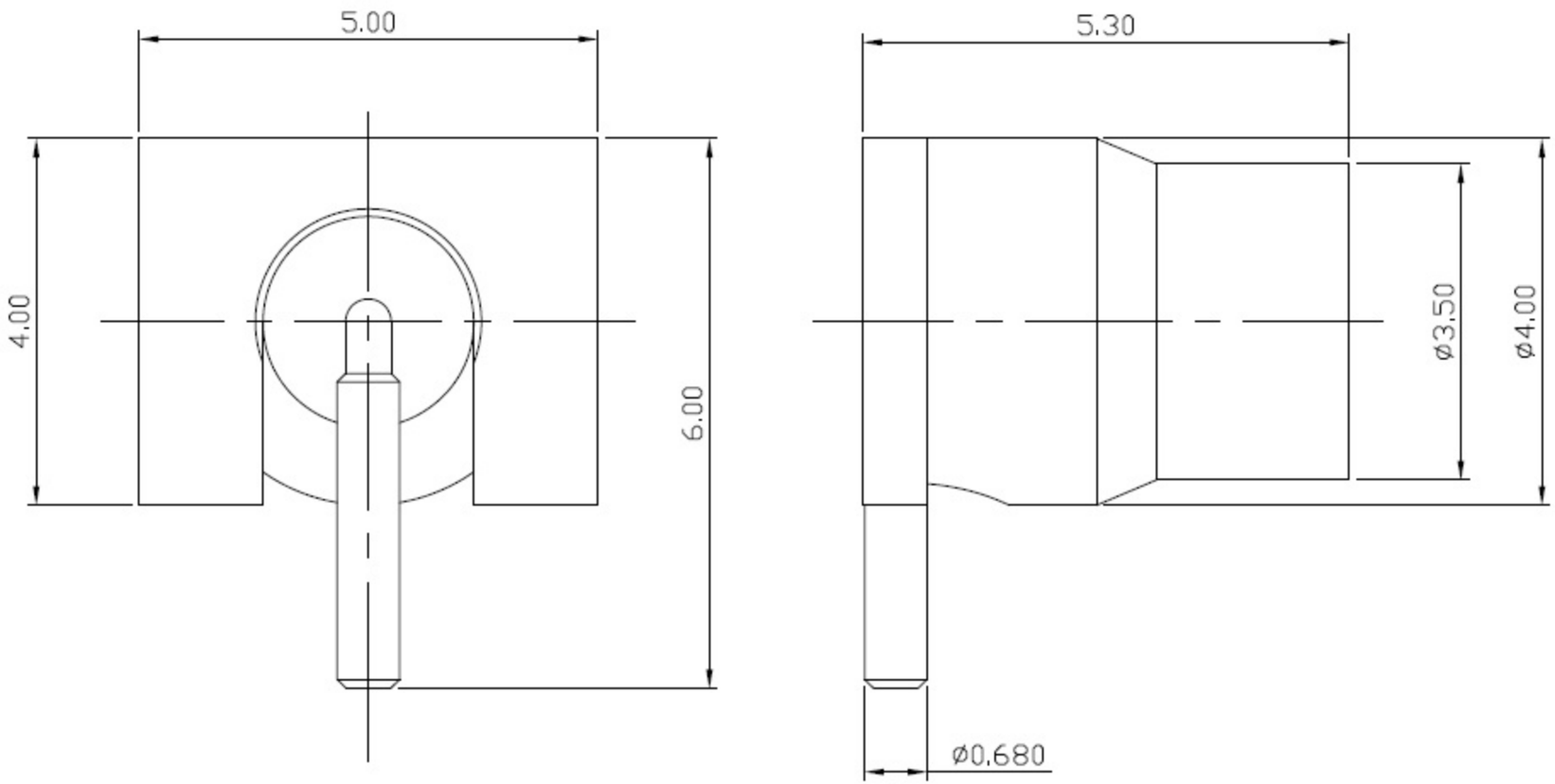

MATERIAL BODY-BRASS
INSULATOR-TEFLON
CONTACT-Be Cu
FINISH : BODY-GOLD PLATING OVER NICKEL
CONTACT-GOLD PLATING OVER NICKEL

DIMENSIONS ARE IN MILLIMETERS TOLERANCE			SCHMID-M
·× ±0.5 ·×× ±0.1 ·××× ±0.05	ANGLE ±3°	SCALE 10:1 REV A-0	TITLE MMCX Jack R/A PC Mount
DRAWN	DATE 98.10.21		DRAWING NO MMCX-5211-TGG
APPROVAL	DATE		FILE NO