Product Specification

SCHMID-M

1. Physical Dimensions UNIT = mm

	DIM	TOL
A	18.00	MAX
B	18.00	MAX
C	13.00	MAX
D	3.00	MIN.
E	15.00	±0.5
F	10.00	±0.5
G	0.7*0.7	±0.1

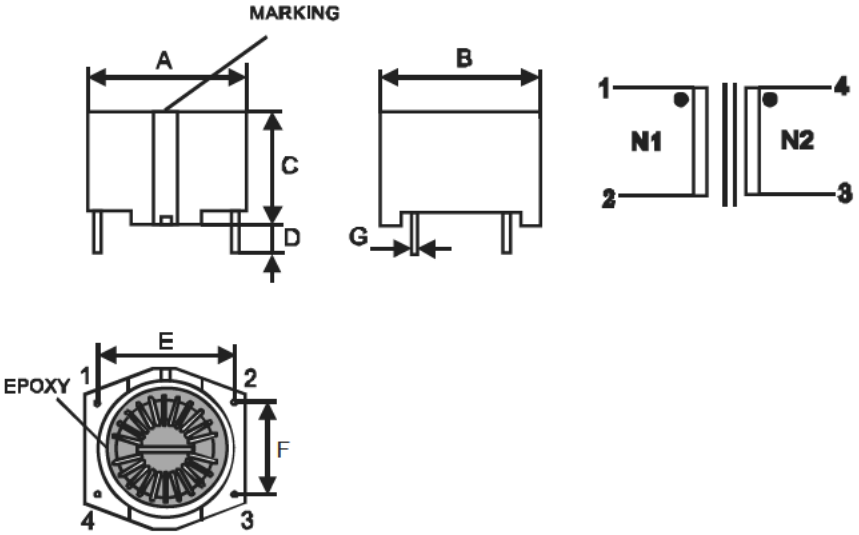

RMARK: MARKING: TH2P2X27mH

2. Electrical Characteristics

NO.	TEST ITEM	LIMIT	TEST CONDITION	TEST INSTRUMENT
1	L1=L2(mH)	27 +50%-30%	10KHZ, 0.3V	VR116
2	DCR1=DCR2 (Ω)	0.8 MAX.	20℃	CH502B
3	HIPOT COIL TO COIL	2000VAC	5mA 2S.	CC2670A

3. WINDING METHOD

	(Ts)	SPEC.	TAPE	REMARK
N1(1-2)	68 REF	2UEW Φ0.2*1P		
N2(4-3)	68 REF	2UEW Φ0.2*1P		

4. Bill of Material

No.	Item	Material name		UL NO.	RoHS
1	WIRE	2UEW 130℃		E354216	YES
2	CORE	FERRITE R10K			YES
3	CASE	PET 4410G6		E130155	YES
4	SPACE	FR-1		E123995	YES
5	EPOXY	BSA-6201A/B			YES
6	VARNISH	1032BOH			YES
7	SOLDER	PURE			YES

PART NO.:	SCHMID-M	CUSTOMER'S MODEL NO.:	NIL
VERSION :	A	CUSTOMER'S PART NO. :	TH2P2X27mH
DATE :	2016.09.26		

TEST REPORT

SCHMID-M

DATE: 2016.09.26

CUSTOMER:	ATD			P/N:							
CUST. P/N:	TH2P2X27mH			Version :		A					
Test instruments				Test condition		10KHZ 0.3V					
Test item:	L1/L2		DCR1/DCR2	HIPOT		A	B	C	D	E	
Unit	mH		Ω			mm	mm	mm	mm	mm	
:SPEC.	27+50%-30%		0.8 MAX.	2KVAC							
1	24.400		0.687	OK							
2	24.500		0.690	OK							
3	25.900		0.687	OK							
4											
5											
6											
7											
8											
9											
10											
MIN.	24.400		0.687								
MAX.	25.900		0.690								
R	1.500		0.003								
AVG.	24.933		0.688								
RESULT	PASS		PASS	PASS							

TESTER: Vanda CHECK: VINCENT