| REV | MARK | ECN NO. | DESCRIPTION | NAME | DATE |
|---|---|---|---|---|---|
| A0 | — | ——— | 新图制定 | | 2016/03/01 |

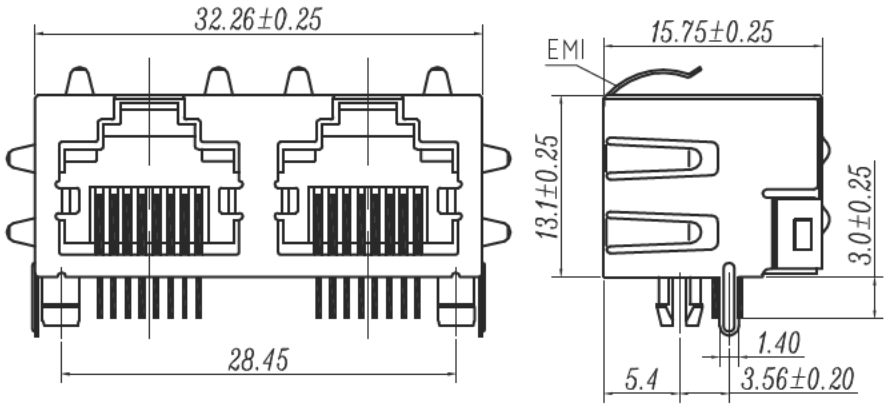


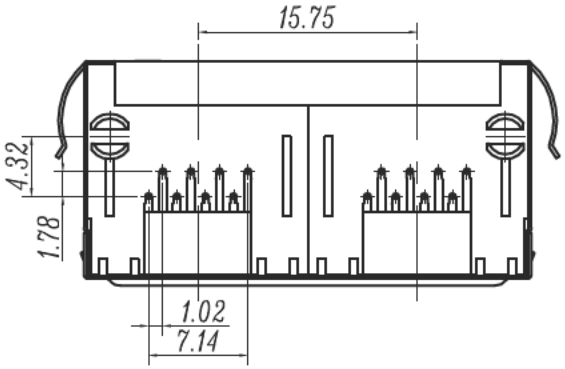


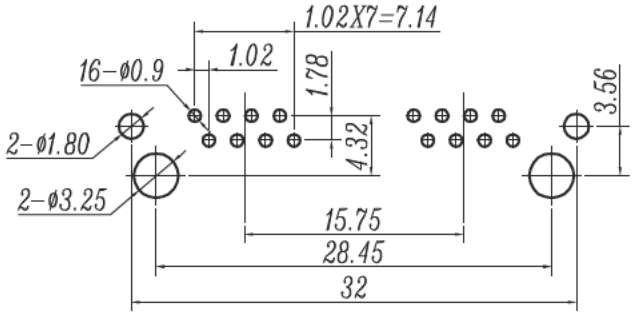


PC Board Layout
Top View

SPECIFICATIONS :

MATERIAL:

1. HOUSING MATERIAL: (1)GLASS FILLED PA66(UL94V-0), (2)GLASS FILLED PA46(UL94V-0), (3)GLASS FILLED PBT(UL94V-0).
2. CONTACT MATERIAL: PHOSPHOR BRONZE Φ0.46MM.
3. PLATING: GOLD PLATING Fu"-50u"OVER NICKEL.

ELECTRICAL:

1. VOLTAGE RATING: 125Vac RMS .
2. CURRENT RATING: 1.5AMP .
3. CONTACT RESISTANCE: 30mΩ MAX .
4. INSULATION RESISTANCE: 500MΩ MIN @ 500Vdc .
5. DIELECTRIC WITHSTANDING VOLTAGE: 1000Vac RMS 50Hz 1MIN.

MECHANICAL:

1. DURRABILITY : 750 CYCLES MIN.
2. INSETION FORCE: 2.2Kgf MAX.
3. RETENTION STRENGTH : 7.7Kgf MIN BETWEEN JACK AND PLUG.

ENVIRONMENTAL:

1. STORAGE TEMPRATURE : -40° C TO 85° C.
2. OPERATION TEMPRATURE : -40° C TO 70° C.

| TOLERANCE UNLESS OTHERWISE SPEC | |
|---|---|
| BASIC DIMENSION | TOLERANCE |
| .X | ±0.25 |
| .XX | ±0.15 |
| .XXX | ±0.05 |
| ANGLES | ±0.5° |

| | | | |
|---|---|---|---|
| DESIGNED | Johnson | SIZE | A4 |
| CHECKED | Fisher | UNIT | MM |
| STANDARDIZED | | SCALE | 1:1 |
| | | WEIGHT | |
| APPROVED | | SHEET | |
| | | REV | |

TITLE : 2xRJ45 Socket; 8p8C;90°

PART NO. : SM C04 0074 88 2A

DRAWING NO. : SM C04 0074 88 2A

SCHMID-M