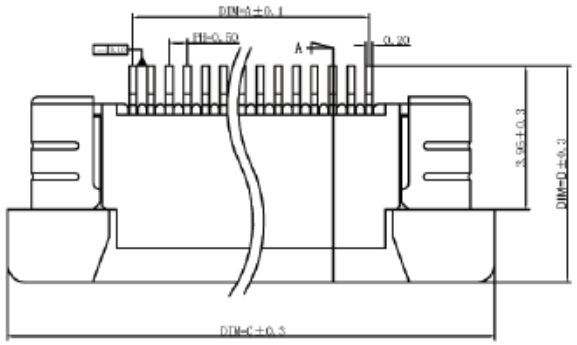

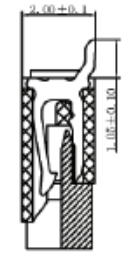

SECTION A-A

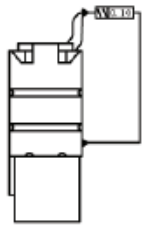

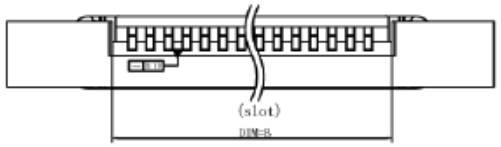

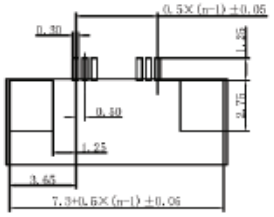

PC BOARD LAYOUT

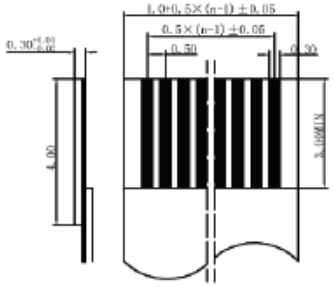

P	A	B	C	D	P1	A	B	C	D
004	1.50	2.57	8.40	5.45	035	17.00	18.07	23.90	5.95
005	2.00	3.07	8.90	5.45	036	17.50	18.57	24.40	5.95
006	2.50	3.57	9.40	5.45	037	18.00	19.07	24.90	5.95
007	3.00	4.07	9.90	5.45	038	18.50	19.57	25.40	5.95
008	3.50	4.57	10.40	5.45	039	19.00	20.07	25.90	5.95
009	4.00	5.07	10.90	5.45	040	19.50	20.57	26.40	5.95
010	4.50	5.57	11.40	5.45	041	20.00	21.07	26.90	5.95
011	5.00	6.07	11.90	5.45	042	20.50	21.57	27.40	5.95
012	5.50	6.57	12.40	5.45	043	21.00	22.07	27.90	5.95
013	6.00	7.07	12.90	5.45	044	21.50	22.57	28.40	5.95
014	6.50	7.57	13.40	5.45	045	22.00	23.07	28.90	5.95
015	7.00	8.07	13.90	5.45	046	22.50	23.57	29.40	5.95
016	7.50	8.57	14.40	5.45	047	23.00	24.07	29.90	5.95
017	8.00	9.07	14.90	5.45	048	23.50	24.57	30.40	5.95
018	8.50	9.57	15.40	5.45	049	24.00	25.07	30.90	5.95
019	9.00	10.07	15.90	5.45	050	24.50	25.57	31.40	5.95
020	9.50	10.57	16.40	5.45	051	25.00	26.07	31.90	5.95
021	10.00	11.07	16.90	5.45	052	25.50	26.57	32.40	5.95
022	10.50	11.57	17.40	5.45	053	26.00	27.07	32.90	5.95
023	11.00	12.07	17.90	5.45	054	26.50	27.57	33.40	5.95
024	11.50	12.57	18.40	5.45	055	27.00	28.07	33.90	5.95
025	12.00	13.07	18.90	5.45	056	27.50	28.57	34.40	5.95
026	12.50	13.57	19.40	5.45	057	28.00	29.07	34.90	5.95
027	13.00	14.07	19.90	5.45	058	28.50	29.57	35.40	5.95
028	13.50	14.57	20.40	5.45	059	29.00	30.07	35.90	5.95
029	14.00	15.07	20.90	5.45	060	29.50	30.57	36.40	5.95
030	14.50	15.57	21.40	5.95	061	30.00	31.07	36.90	5.95
031	15.00	16.07	21.90	5.95	062	30.50	31.57	37.40	5.95
032	15.50	16.57	22.40	5.95	063	31.00	32.07	37.90	5.95
033	16.00	17.07	22.90	5.95	064	31.50	32.57	38.40	5.95
034	16.50	17.57	23.40	5.95					

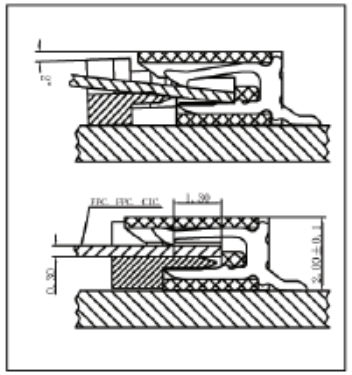

Electrical

Voltage:50 V AC(rms)/DC
Current:0.5 A AC(rms)/DC
Contact Resistance:40 mΩ max(initial)
Dielectric Withstanding Voltage:200 V AC/rms
Insulation Resistance:500 MΩ min
Operating Temp:-25° C~+85° C

TOLERANCE		SCHMID-M	
SCALE	UNIT mm	TITLE	
DRAW Nowak	DATE 4.12.2018	SM C06 3985 XX T	
CHECK Green	REV		
RoHS COMPLIANT		DESCRIPTION	
		Connector SMT ZIF 0,5mm Horizontal Top Contact	