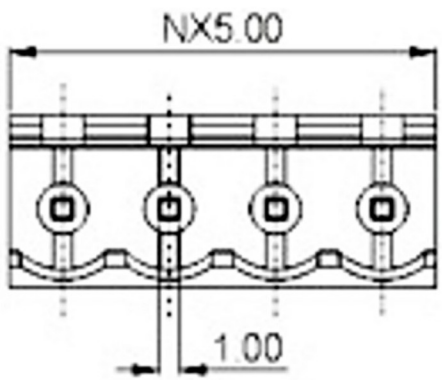

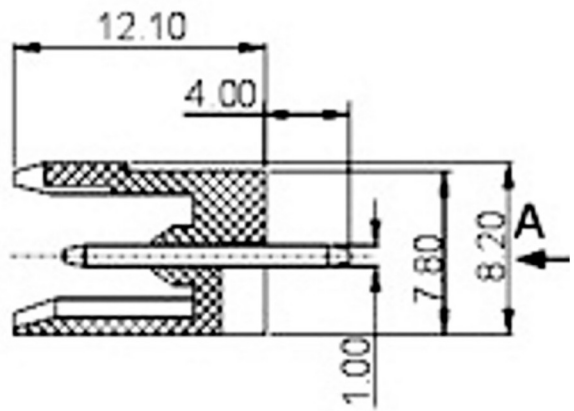

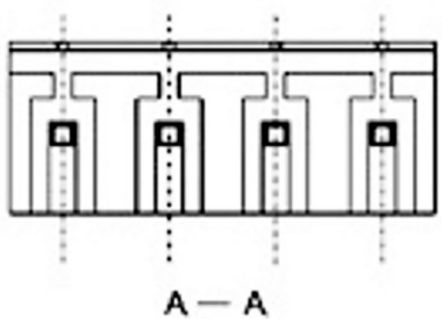

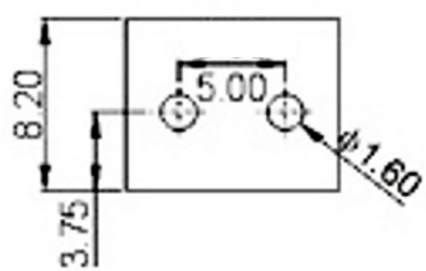

Standard	UL	VDE
Rated voltage	300V	320V
Rated current	15A	20A
Withstanding voltage	AC2500V/1Min	
Ambient temperature	(-)40°C to +105°C	
Pitch	5.00mm (.197")	
Poles	2P, 3P ---Any poles	
Housing	PA66, UL94V-0	
Solder Pins	Brass, Tin plated	

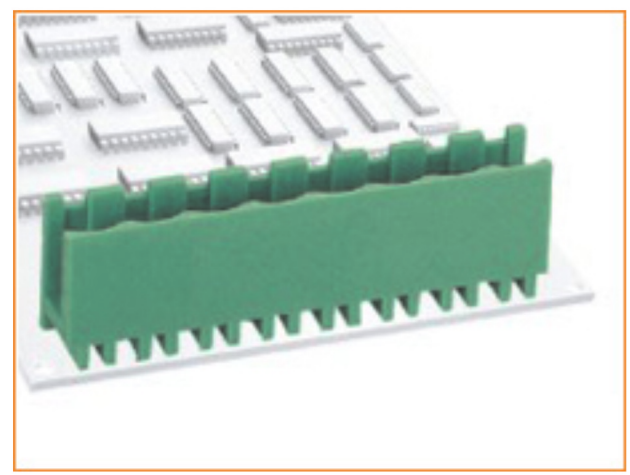

RoHS Compliant

SCHMID-M

APPD.	SCALE	TOLERANCE X.XX ± 0.25 X.X ± 0.35 ANG. ±	PART NAME Pluggable Terminal Block PCB Straight Side Open Frame Green XX: No. Poles
DWG. HELGA	UNIT MM	SIZE. A4	PART NO. SM C09 0503 XX SNC
DATE 2013/10	PAGE 1 OF 1	REV. C	