REV	DATE	DESCRIPTION
X1	01/19-2022	New Issue

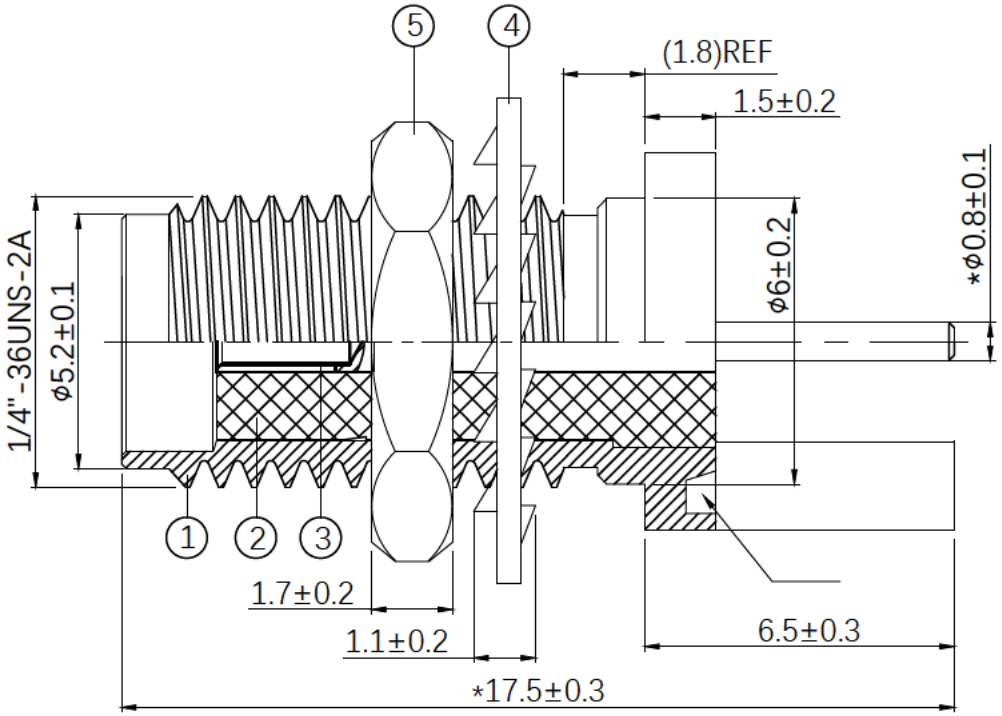

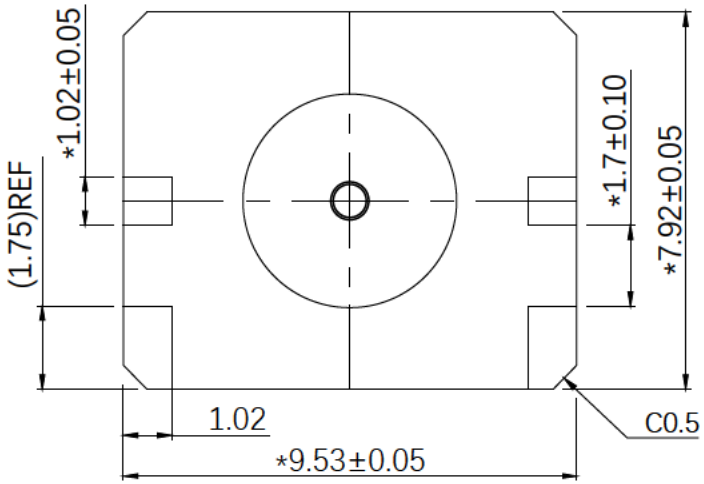

1.ELECTRICAL PROPERTIES:
1.1 Frequency Range.....0~3GHz
1.2 Impendance.....50 Ohm Nominal
1.3 VSWR.....2.0(max)
2.These Products are in conformity with RoHS2.0
3.Key controls with * size.
4.Nut and washer need to be assembled and shipped with SMA connector.

NO	DESCRIPTION		Q'TY	REMARK
5	Nut	Brass, Gold plated	1	
4	Washer	Brass, Gold plated	1	
3	Pin	Brass, Gold plated	1	
2	Insulator	PTFE	1	
1	Body	Brass, Gold plated	1	

CUSTOMER'S SINGATURE

XXX.	±2.0	APPROVED	
XX.	±1.0		
X.	±0.5	CHECKED	
.X	±0.3		
.XX	±0.2	DRAWING	yyt

CUSTOMER:
PART NO: SMA-52060s-TGG
PART NAME: SMA Card Edge Connector

REV	UNIT	FILE:
X1	mm	SHEET: 1/1

SCHMID-M