Impedance : 50 ohm
Frequency Range : 0 to 12.4GHZ
VSWR : Angle 1.5 max
INSULATOR Resistance : 5000 megohms min

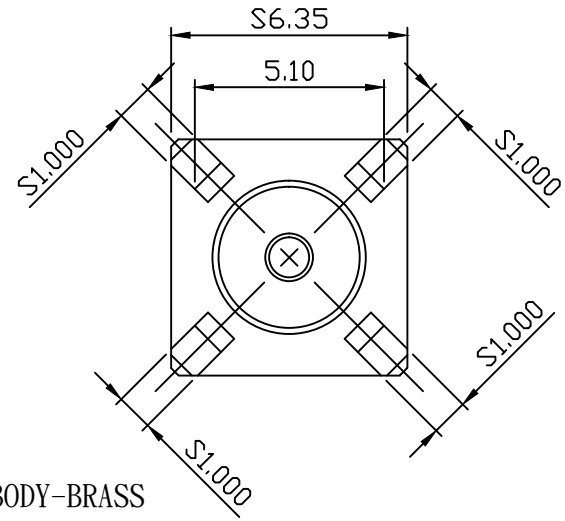

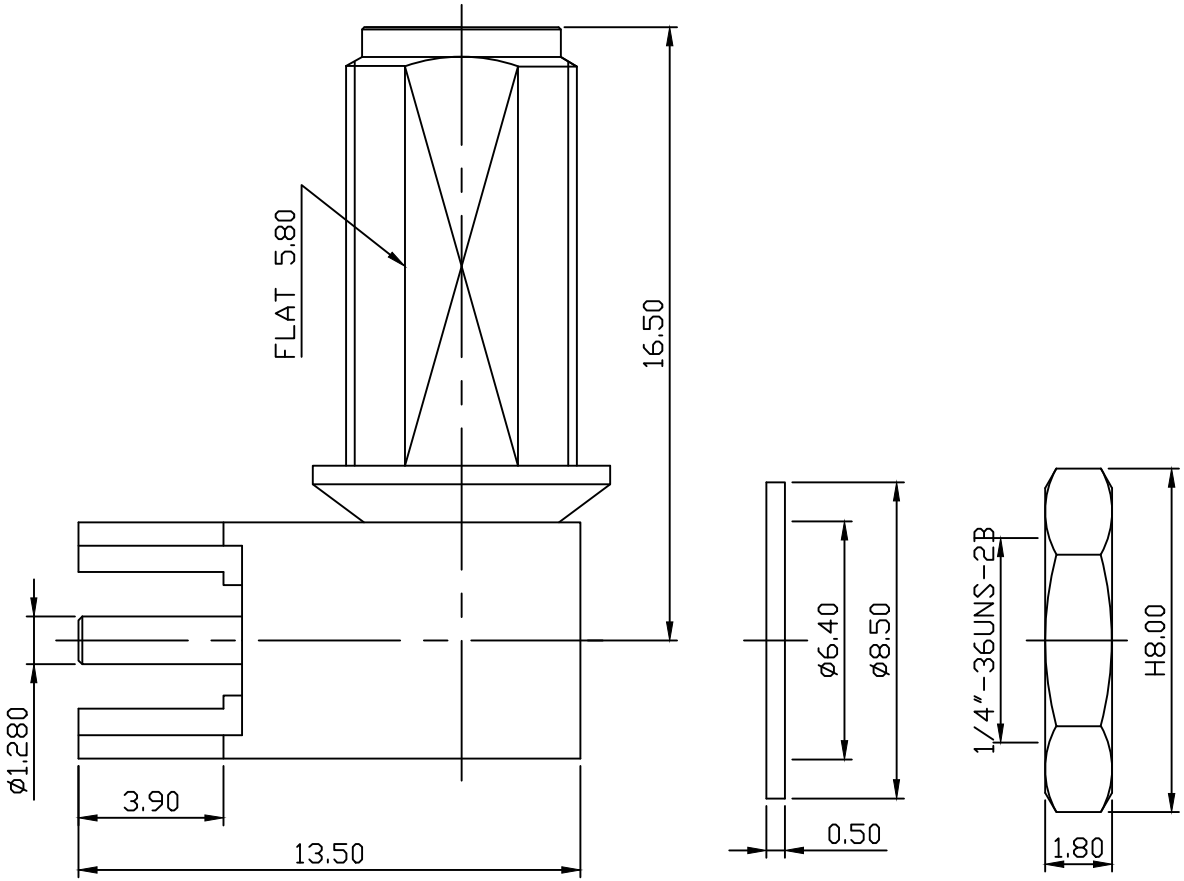

MATERIAL : BODY-BRASS
BODY-BRASS
CONTACT PIN-BERYLLIUM COPPER
CONTACT PIN-BRASS
INSULATOR-TEFLON
INSULATOR-TEFLON
CAP-BRASS
WASHER-BRASS
NUT-BRASS

FINISH : BODY-GOLD PLATING OVER NICKEL
CONTACT PIN-GOLD PLATING OVER NICKEL
CAP-GOLD PLATING OVER NICKEL
WASHER-GOLD PLATING OVER NICKEL
NUT-GOLD PLATING OVER NICKEL

DIMENSIONS ARE IN MILLIMETERS TOLERANCE			SCHMID-M
·× ±0.5 ·×× ±0.1 ·××× ±0.05	ANGLE ±3°	SCALE 5:1 REV A-3	TITLE SMA R/A PCB MOUNT-BULKHEAD. JACK
DRAWN	DATE 92.06.12		DRAWING NO SMA-5223-TGG
APPROVAL	DATE		FILE NO