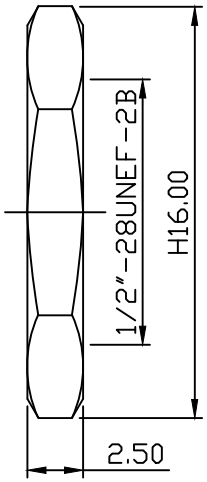

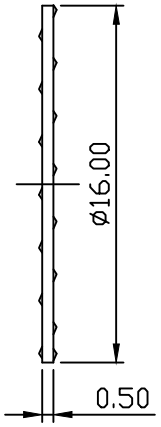

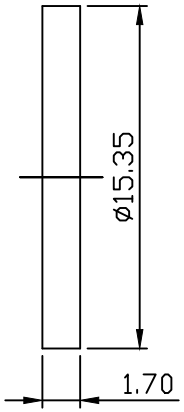

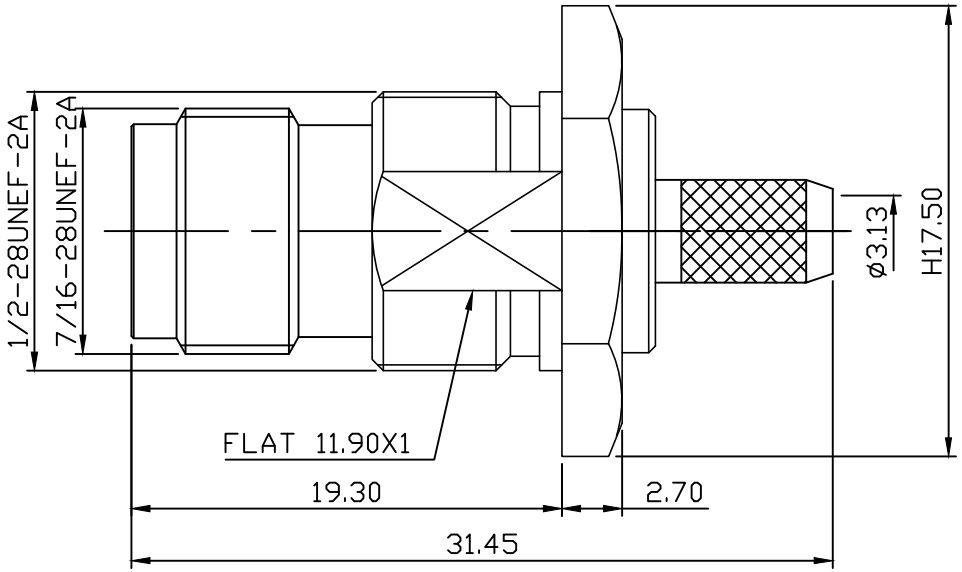

MATERIAL：BODY-BRASS
SLEEVE-BRASS
INSULATOR-DELRIN
SLEEVE-BRASS
CONTACT-BRASS
LOCK WASHER-BRASS
NUT-BRASS
O-RING-SI RUBBER
FERRULE-BRASS

FINISH：BODY-NICKEL PLATING
SLEEVE-NICKEL PLATING
CONTACT-GOLD PLATING OVER NICKEL
LOCK WASHER-NICKEL PLATING
NUT-NICKEL PLATING
FERRULE-NICKEL PLATING

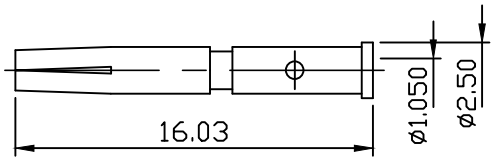

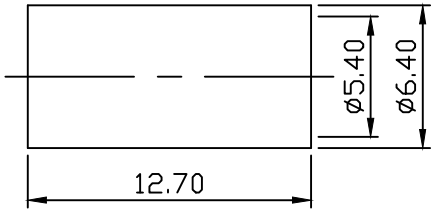

DIMENSIONS ARE IN MILLIMETERS TOLERANCE			SCHMID-M
·× ±0.5 ·×× ±0.1 ·××× ±0.05	ANGLE ±3°	SCALE 3:1 REV A-3	TITLE: TNC STRAIGHT BULKHEAD JACK CRIMP FOR RG58u, RG58A/u, RG141A/u
DRAWN	DATE 92.06.25		DRAWING NO: TNC-1205-DGN
APPROVAL	DATE		FILE NO